Cambridge International Examinations
Cambridge International General Certificate of Secondary Education

CANDIDATE NAME	
CENTRE NUMBER	
CANDIDATE NUMBER	

PHYSICS **0625/43**

Paper 4 Theory (Extended) **October/November 2017**

1 hour 15 minutes

Candidates answer on the Question Paper.

No Additional Materials are required.

READ THESE INSTRUCTIONS FIRST

Write your Centre number, candidate number and name on all the work you hand in.
Write in dark blue or black pen.
You may use an HB pencil for any diagrams or graphs.
Do not use staples, paper clips, glue or correction fluid.
DO **NOT** WRITE IN ANY BARCODES.

Answer **all** questions.
Electronic calculators may be used.
You may lose marks if you do not show your working or if you do not use appropriate units.
Take the weight of 1.0 kg to be 10 N (acceleration of free fall = 10 m/s^2).

At the end of the examination, fasten all your work securely together.
The number of marks is given in brackets [ ] at the end of each question or part question.

The syllabus is approved for use in England, Wales and Northern Ireland as a Cambridge International Level 1/Level 2 Certificate.

This document consists of **14** printed pages and **2** blank pages.

DC (LK/SG) 133348/6
© UCLES 2017

CAMBRIDGE International Examinations

[Turn over

www.root19.com +91 - 9969 353 391

1 A truck accelerates uniformly along a straight, horizontal road. The mass of the truck is 2.0×10^4 kg.

(a) The speed of the truck increases from rest to 12 m/s in 30 s.

Calculate

(i) the distance travelled by the truck during this time,

distance = ...[2]

(ii) the resultant force on the truck.

resultant force = ...[4]

(b) To maintain a uniform acceleration, the forward force on the truck must change.
Explain why.

.....

.....

.....[2]

[Total: 8]

© UCLES 2017
www.root19.com

+91 - 9969 353 391

2 Fig. 2.1 shows a measuring cylinder that contains a coloured liquid.

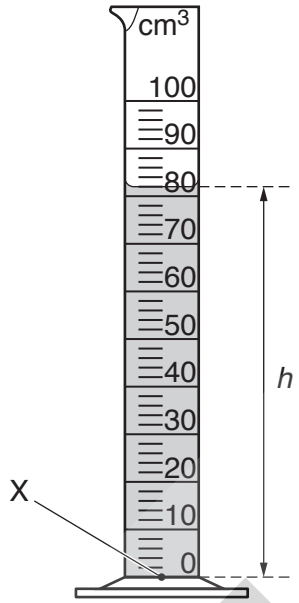

Fig. 2.1

The measuring cylinder contains 82 cm^3 of the liquid. The density of the liquid is 950 kg/m^3.

(a) Calculate the mass of the liquid.

mass = ...[3]

(b) The height *h* of the liquid in the measuring cylinder is 0.094 m.

(i) Calculate the pressure due to the liquid at point X in Fig. 2.1.

pressure = ...[2]

www.root19.com +91 - 9969 353 301

(ii) The true pressure at point X is different from the value calculated in **(b)(i)**. Explain why.

.....

.....[1]

(c) A small object is made of steel. It is placed level with the top surface of the liquid in the measuring cylinder and then released. The object sinks in this liquid.

(i) Explain why the object sinks in this liquid.

.....

.....[1]

(ii) Describe how the volume of the object can now be determined.

.....

.....

.....[1]

[Total: 8]

© UCLES 2017
www.root19.com

+91 - 9969 353 391

3 Fig. 3.1 shows solar cells that use radiation from the Sun to generate electricity.

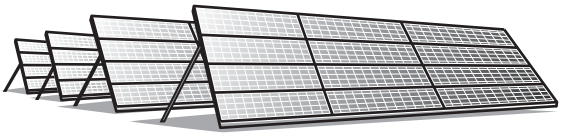

Fig. 3.1

(a) **(i)** State the name of the process which releases energy in the Sun.

.....[1]

(ii) A reaction takes place in the Sun as energy is released.

Describe what happens in this reaction.

.....

.....

.....[2]

(b) Apart from solar cells, there are other energy resources used on Earth for which the radiation from the Sun is the source.

State the name of **one** of these energy resources and explain whether it is renewable.

.....

.....

.....[2]

(c) State **two** advantages and **two** disadvantages of using solar cells to generate electricity.

advantage 1 .....

.....

advantage 2 .....

.....

disadvantage 1 .....

.....

disadvantage 2 .....

.....

[4]

[Total: 9]

www.root19.com +91 - 9969 353 301

4 **(a)** The molecules of most liquids are, on average, slightly further apart than the molecules of a solid.

State **one** other difference between the molecular structures of a solid and a liquid.

.....

.....[1]

(b) A glass tube passes through a stopper and into a glass flask. Fig. 4.1 shows that the flask is completely full of a liquid and that there is also some liquid in the tube.

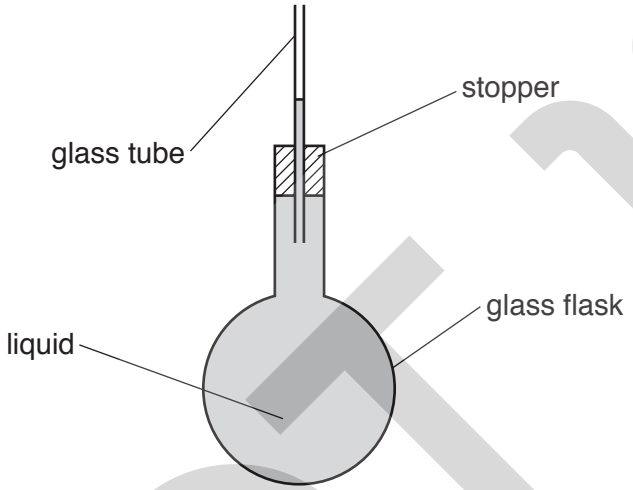

Fig. 4.1

The flask is immersed in a large beaker of very hot water. At first, the level of the liquid in the tube falls, but after a short time it rises.

(i) Explain why, at first, the level of the liquid in the tube falls.

.....

.....

.....

.....[3]

(ii) Explain why the liquid level in the tube stops falling and starts to rise.

.....

.....

.....[2]

[Total: 6]

www.root19.com +91 - 9969 353 391

5 A silver spoon has a thermal capacity of 7.2 J / °C.

(a) Explain what is meant by *thermal capacity*.

.....

.....

.....[2]

(b) The silver spoon is dropped into a saucepan of boiling water. The internal energy of the spoon increases as its temperature increases from 22 °C to 100 °C.

(i) Calculate the increase in the internal energy of the spoon.

increase in internal energy = ...[1]

(ii) State, in terms of the atoms, what is meant by *internal energy*.

.....

.....

.....[2]

(c) The spoon is removed from the boiling water and immediately it begins to transfer energy to the surroundings. The temperature of the surroundings is 22 °C.

On Fig. 5.1, sketch a graph to show how the temperature of the spoon changes with time from the instant that it is removed from the water. [3]

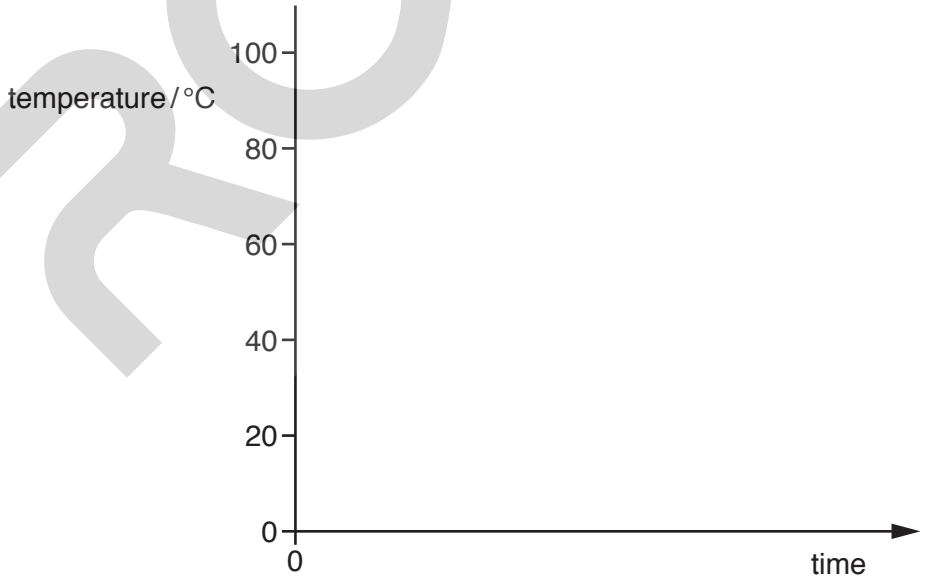

Fig. 5.1

[Total: 8]

www.root19.com +91 - 9969 353 301

6 Visible light is one component of the electromagnetic spectrum.

(a) **(i)** In the table, place a tick in the box next to the approximate value of the speed of light in air. [1]

speed / m/s	
3.0×10^{10}	
3.0×10^{8}	
3.0×10^{6}	
3.0×10^{4}	
3.0×10^{2}	

(ii) The frequency of a light wave is 4.8×10^{14} Hz.

Calculate the wavelength of this light in air.

wavelength = ...[2]

(b) Light is travelling in an optical fibre that is made of glass.

(i) The glass has a refractive index of 1.5.

1. Explain why the quantity *refractive index* does **not** have a unit.

.....

.....[1]

2. Calculate the speed of light in the glass.

speed = ...[2]

(ii) Describe **one** use of optical fibres in communication technology.

.....

.....

.....

.....

.....[3]

[Total: 9]

www.root19.com +91 - 9969 353 391

7 **(a)** Fig. 7.1 shows a converging lens and its principal axis. The points F_1 and F_2 are each a principal focus of the lens.

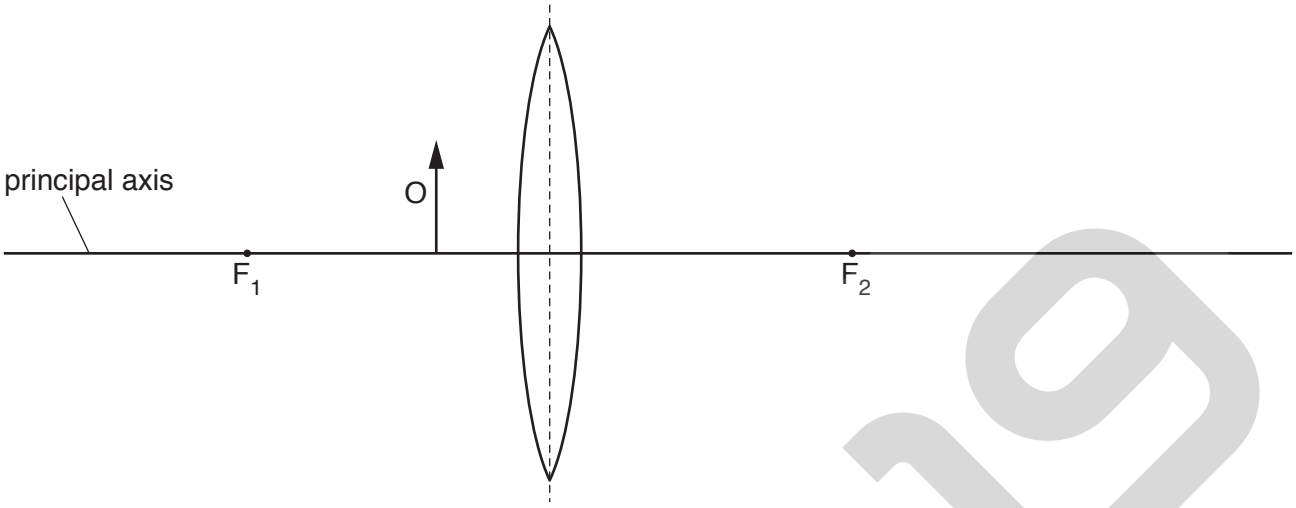

Fig. 7.1

An object O is placed between F_1 and the lens.

(i) On Fig. 7.1, draw **two** rays from the top of the object O to locate the image. Label the image I. [3]

(ii) The object O is moved to the left along the principal axis so that it is further from the lens than F_1.

Fig. 7.2 is a diagram of the new arrangement with the new image shown.

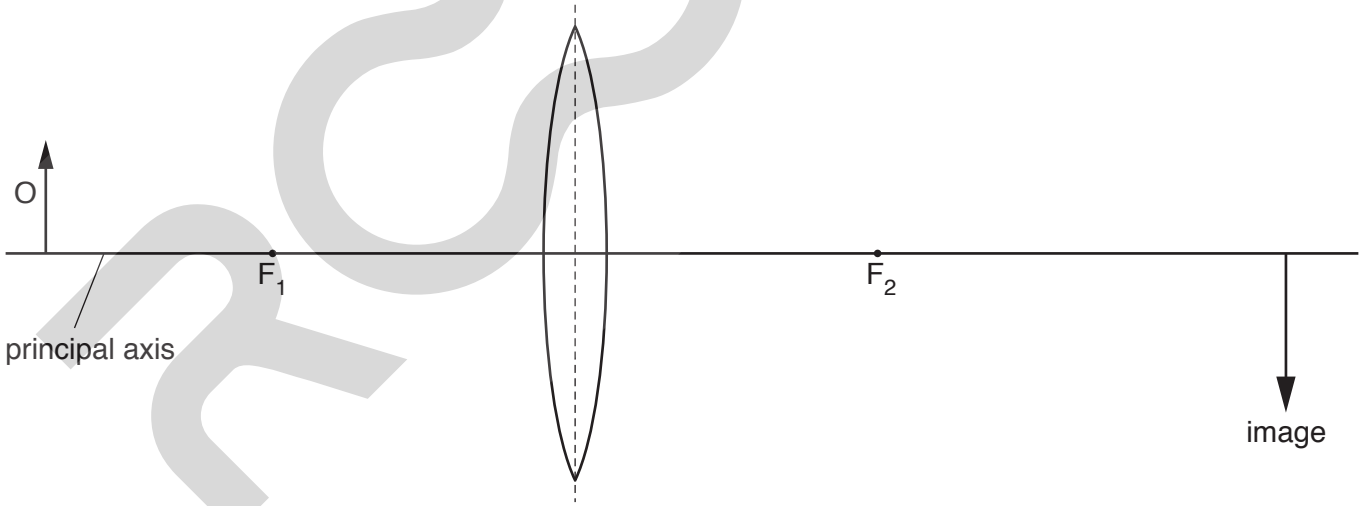

Fig. 7.2

Underline **three** of the terms below that describe the image shown in Fig. 7.2. [2]

diminished **enlarged** **inverted** **real** **same size** **upright** **virtual**

www.root19.com +91 - 9969 353 301

(b) Fig. 7.3 shows yellow light passing through a glass prism.

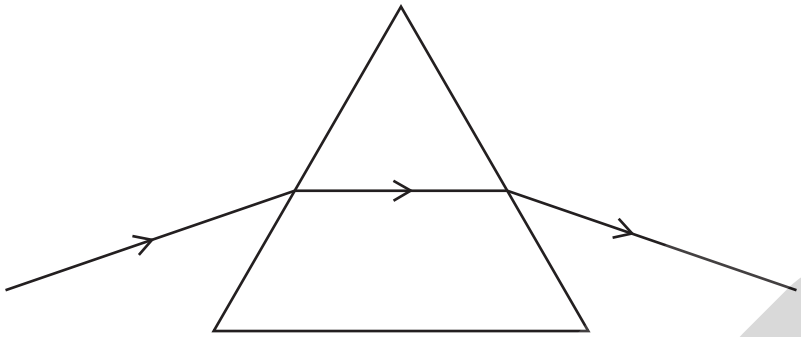

Fig. 7.3

Blue light enters the prism along the same path as the yellow light.

On Fig. 7.3, draw the path of the blue light as it enters, passes through and leaves the prism. [2]

[Total: 7]

© UCLES 2017
www.root19.com

+91 - 9969 353 391

8 **(a)** Fig. 8.1 shows an uncharged conducting sphere on an insulating stand placed close to a positively charged rod.

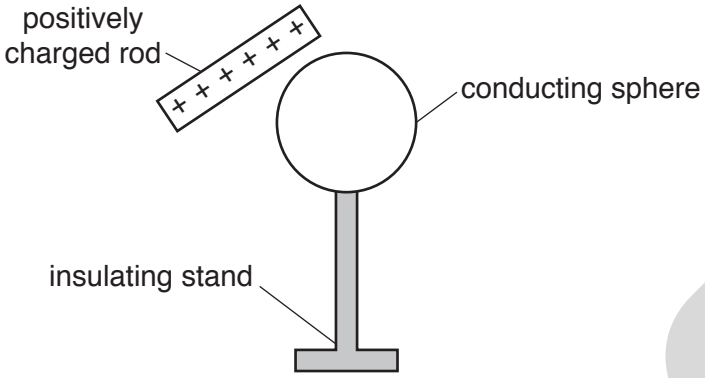

Fig. 8.1

The rod and the sphere are not moved.

Describe how to charge the sphere using a wire connected to earth and explain whether the sphere becomes positively charged or negatively charged.

.....

.....

.....

.....[3]

(b) Fig. 8.2 shows a small black circle that represents a positive charge.

On Fig. 8.2, draw the pattern and the direction of the electric field in the region around the charge. [2]

Fig. 8.2

(c) A charge of 7.0 C flows along a wire in 5.0 minutes.

Calculate the current in the wire.

current = ...[2]

[Total: 7]

www.root19.com +91 - 9969 353 301

9 **(a)** Fig. 9.1 shows the structure of an alternating current (a.c.) generator.

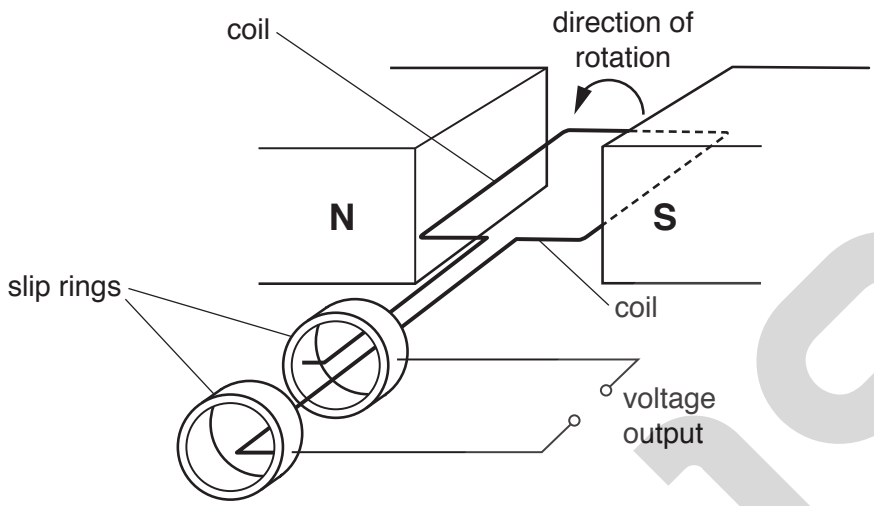

Fig. 9.1

The coil completes one rotation every 0.020 s.

(i) Using the axes in Fig. 9.2, sketch a graph to show how the voltage output of the generator varies with time during a period of 0.040 s. [2]

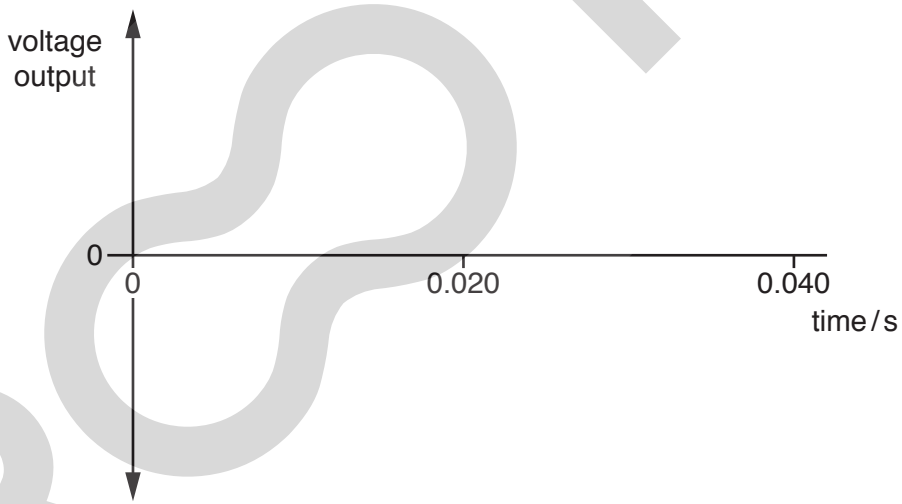

Fig. 9.2

(ii) On your graph in Fig. 9.2, mark a point labelled A to indicate a time when the coil is vertical. [1]

www.root19.com +91 - 9969 353 391

(b) There is an alternating current (a.c.) in a horizontal wire that is buried in a wall. A builder must miss this wire when drilling a hole in the wall.

The builder places an instrument against the wall that registers a reading when it is close to the wire. The instrument includes a long coil (solenoid) S that has an iron core and a sensitive voltmeter. Fig. 9.3 shows the circuit of the instrument close to the wire.

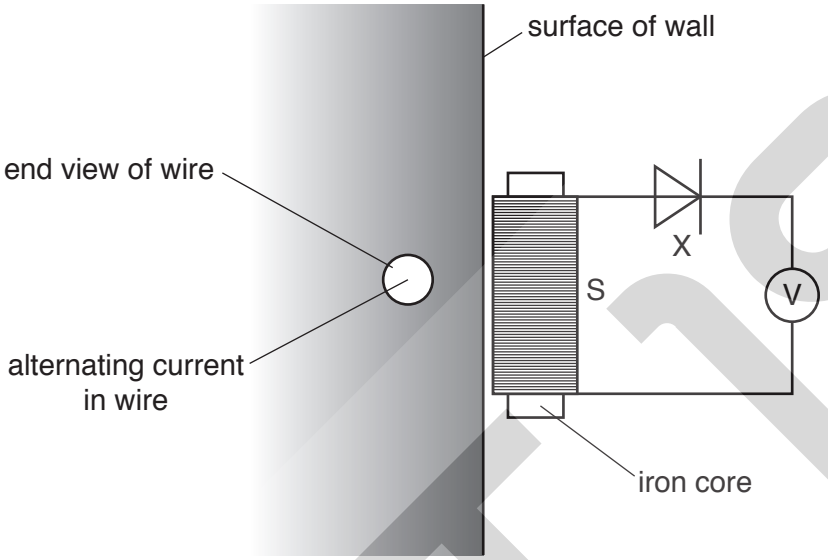

Fig. 9.3

(i) Explain why there is a reading on the voltmeter.

.....

.....

.....

.....[3]

(ii) State the name and the effect of the component labelled X in Fig. 9.3.

.....

.....

.....[2]

[Total: 8]

www.root19.com +91 - 9969 353 301

10 **(a)** State the nature of γ-rays.

.....

.....[2]

(b) A nucleus of technetium-99 ($^{99}_{43}Tc$) emits only a γ-ray.

State any effect of this on

(i) the proton number of the nucleus,

.....[1]

(ii) the nucleon number of the nucleus.

.....[1]

(c) In a laboratory a radiation detector displays a count rate of 16 counts / minute due to background radiation.

(i) State what is meant by *background radiation*.

.....

.....[1]

(ii) A sample of a radioactive isotope is placed near to the radiation detector and a count rate of 112 counts / minute is recorded.

After 18 hours, the count rate recorded is 28 counts / minute.

Determine the half-life of this isotope.

half-life = ...[3]

(d) Radioactive isotopes are stored in thick lead containers.

State **two** precautions to be taken when radioactive isotopes are **used**.

1. .....

2. .....
[2]

[Total: 10]

www.root19.com +91 - 9969 353 391

BLANK PAGE

© UCLES 2017
www.root19.com

+91 - 9969 353 391

BLANK PAGE

Permission to reproduce items where third-party owned material protected by copyright is included has been sought and cleared where possible. Every reasonable effort has been made by the publisher (UCLES) to trace copyright holders, but if any items requiring clearance have unwittingly been included, the publisher will be pleased to make amends at the earliest possible opportunity.

To avoid the issue of disclosure of answer-related information to candidates, all copyright acknowledgements are reproduced online in the Cambridge International Examinations Copyright Acknowledgements Booklet. This is produced for each series of examinations and is freely available to download at www.cie.org.uk after the live examination series.

Cambridge International Examinations is part of the Cambridge Assessment Group. Cambridge Assessment is the brand name of University of Cambridge Local Examinations Syndicate (UCLES), which is itself a department of the University of Cambridge.

www.root19.com +91 - 9969 353 391